Cambridge International Examinations
Cambridge International General Certificate of Secondary Education

CANDIDATE NAME	
CENTRE NUMBER	
CANDIDATE NUMBER	

PHYSICS **0625/42**

Paper 4 Theory (Extended) **October/November 2017**

1 hour 15 minutes

Candidates answer on the Question Paper.

No Additional Materials are required.

READ THESE INSTRUCTIONS FIRST

Write your Centre number, candidate number and name on all the work you hand in.
Write in dark blue or black pen.
You may use an HB pencil for any diagrams or graphs.
Do not use staples, paper clips, glue or correction fluid.
DO **NOT** WRITE IN ANY BARCODES.

Answer **all** questions.
Electronic calculators may be used.
You may lose marks if you do not show your working or if you do not use appropriate units.
Take the weight of 1.0 kg to be 10 N (acceleration of free fall = 10 m/s^2).

At the end of the examination, fasten all your work securely together.
The number of marks is given in brackets [ ] at the end of each question or part question.

The syllabus is approved for use in England, Wales and Northern Ireland as a Cambridge International Level 1/Level 2 Certificate.

This document consists of **16** printed pages.

DC (LK/SG) 133347/6
© UCLES 2017

CAMBRIDGE International Examinations

[Turn over

www.root19.com +91 - 9969 353 391

1 Fig. 1.1 shows a cylinder made from copper of density 9000 kg / m^3.

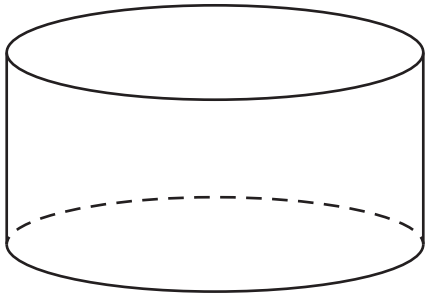

Fig. 1.1

The volume of the cylinder is 75 cm^3.

(a) Calculate the mass of the cylinder.

mass = ...[2]

(b) The gravitational field strength is 10 N / kg.

(i) Calculate the weight of the cylinder.

weight = ...[2]

(ii) State **one** way in which weight differs from mass.

.....

.....

.....[1]

© UCLES 2017
www.root19.com

+91 - 9969 353 391

(c) Fig. 1.2 shows the cylinder immersed in a liquid.

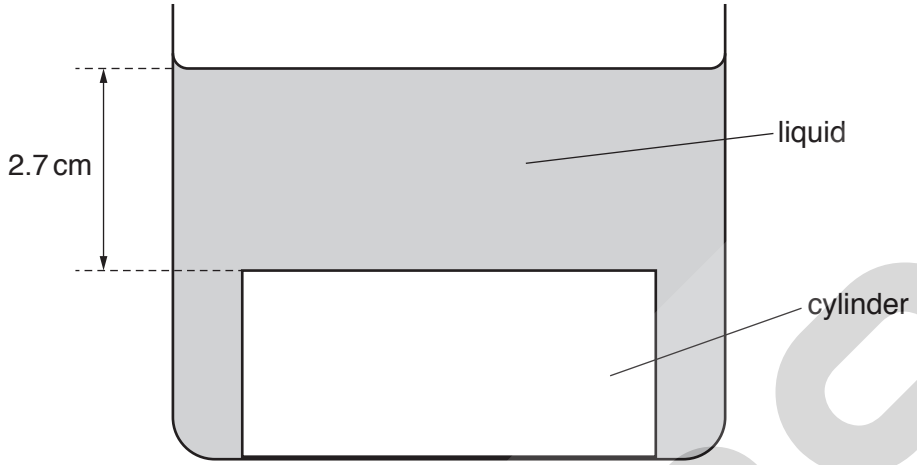

Fig. 1.2 (not to scale)

The upper face of the cylinder is at a depth of 2.7 cm below the surface of the liquid.

The pressure due to the liquid at the upper face of the cylinder is 560 Pa.

(i) Calculate the density of the liquid.

density = ...[2]

(ii) Explain why the cylinder does **not** float in this liquid.

.....

.....[1]

[Total: 8]

www.root19.com +91 - 9969 353 301

2 **(a)** An object is moving in a straight line at constant speed. A resultant force begins to act upon the object.

State the ways in which the force may change the motion of the object.

.....

.....

.....

.....[2]

(b) State **one** other effect a force could have on the object.

.....[1]

(c) The mass of a car is 1400 kg. The car, initially at rest, is moved along a level road by a resultant force of 3500 N. The car reaches a speed of 30 m / s.

(i) Calculate the average acceleration of the car.

acceleration = ...[2]

(ii) Calculate the time for which the force is applied.

time = ...[2]

(iii) State the name of a force which opposes the motion of the car.

.....[1]

[Total: 8]

© UCLES 2017
www.root19.com

+91 - 9969 353 391

3 **(a)** State the name of a fuel that is burnt to produce large amounts of electrical energy.

Describe a process by which electrical energy is obtained from the chemical energy stored in this fuel.

Name of fuel: .....

Description of process: .....

.....

.....

.....

.....[4]

(b) Explain why the Sun is the source of the energy stored in the fuel in **(a)**.

.....

.....

.....

.....[2]

(c) Explain whether the process in **(a)** is renewable.

.....

.....

.....

.....[2]

[Total: 8]

© UCLES 2017
www.root19.com

+91 - 9969 353 301

4 A beaker contains water at room temperature. Fig. 4.1 shows the beaker placed on a tripod above a Bunsen burner.

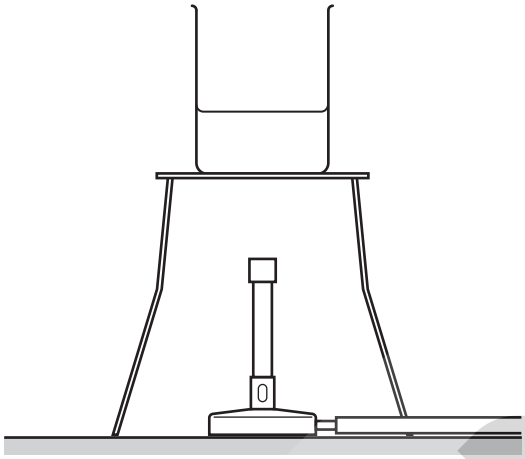

Fig. 4.1

The Bunsen burner is lit and the temperature of the water begins to increase.

(a) The water is evaporating.

(i) Describe **one** difference between evaporation and boiling.

.....

.....

.....[2]

(ii) State and explain what happens to the rate at which the water evaporates as its temperature increases.

.....

.....

.....[1]

www.root19.com +91 - 9969 353 391

(b) After a few minutes, the water reaches its boiling point temperature. The water continues to gain energy from the Bunsen burner.

(i) State what happens to the temperature of the water in the beaker.

.....

.....[1]

(ii) The specific latent heat of vaporisation of water is 2.3×10^6 J/kg. After the water reaches its boiling point, it takes 12 minutes for 0.095 kg of water to boil away.

Calculate the average rate at which energy is being supplied to the water by heating.

rate of energy supplied = ...[3]

[Total: 7]

© UCLES 2017
www.root19.com

+91 - 9969 353 301

5 **(a)** Explain why houses in hot countries are often painted white.
Use ideas about the transfer of thermal energy in your answer.

.....

.....

.....

.....[3]

(b) As a star approaches the end of its life, the amount of radiation emitted from it per second changes.

The star cools down.
State any effect on the rate of emission of radiation.

.....

.....[1]

[Total: 4]

© UCLES 2017
www.root19.com

+91 - 9969 353 391

6 Fig. 6.1 represents wavefronts of a water wave on the surface of water approaching a gap in a barrier.

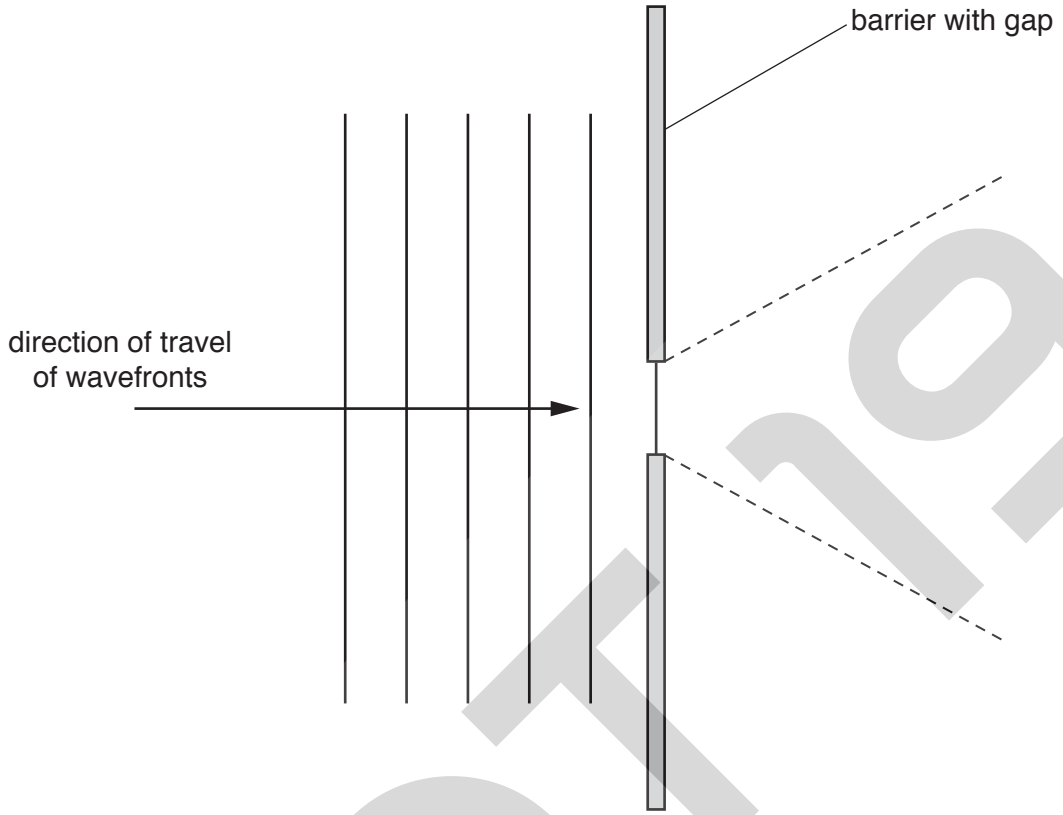

Fig. 6.1

(a) The wavefronts to the right of the barrier spread out as far as the dashed lines in Fig. 6.1.

(i) State the name of the process of spreading out.

.....[1]

(ii) Draw **four** wavefronts to the right of the barrier. [2]

(b) **(i)** State the effect of increasing the width of the gap in the barrier.

.....

.....[1]

(ii) State and explain the effect of decreasing the frequency of the water wave.

.....

.....

.....[2]

[Total: 6]

www.root19.com +91 - 9969 353 301

7 **(a)** Fig. 7.1 is a diagram of a converging lens used to produce an image of an object. Each point marked F is a principal focus.

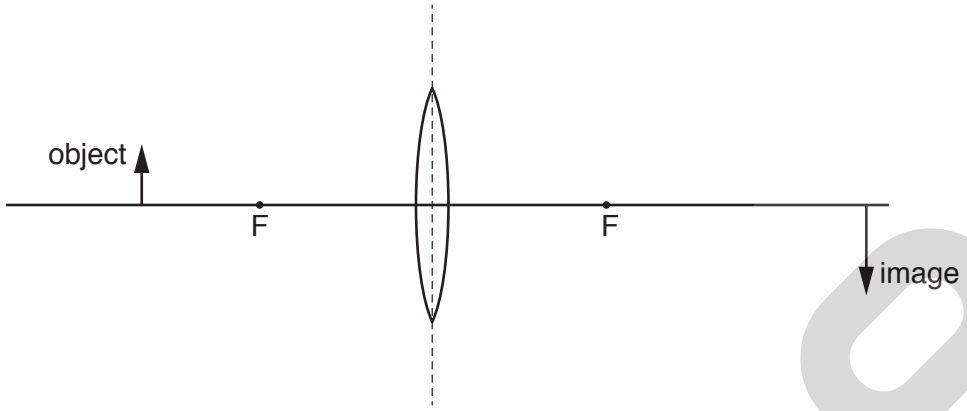

Fig. 7.1

Write down **three** terms that describe the image produced.

.....

.....

.....[3]

(b) Fig. 7.2 shows a plane mirror, a point object O and an observer's eye.

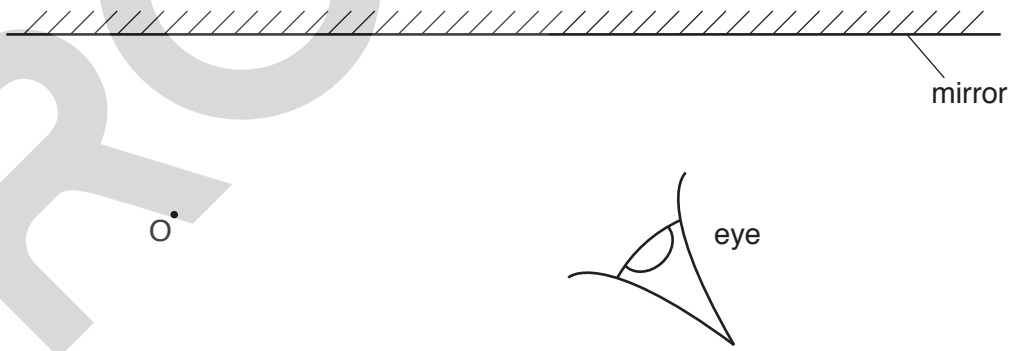

Fig. 7.2

(i) On Fig. 7.2, draw **two** rays from the object reflected to the observer's eye. [2]

(ii) On Fig. 7.2, complete your drawing to determine the position of the image of the object O. Label this image I.

[2]

[Total: 7]

www.root19.com +91 - 9969 353 391

8 Fig. 8.1 is a circuit diagram.

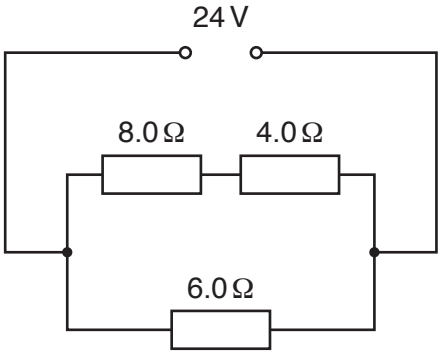

Fig. 8.1

Calculate

(a) the resistance of the circuit,

resistance = ...[4]

(b) the potential difference (p.d.) across the 8.0 Ω resistor.

p.d. = ...[2]

[Total: 6]

© UCLES 2017
www.root19.com

+91 - 9969 353 301

9 **(a)** Fig. 9.1 is a circuit diagram.

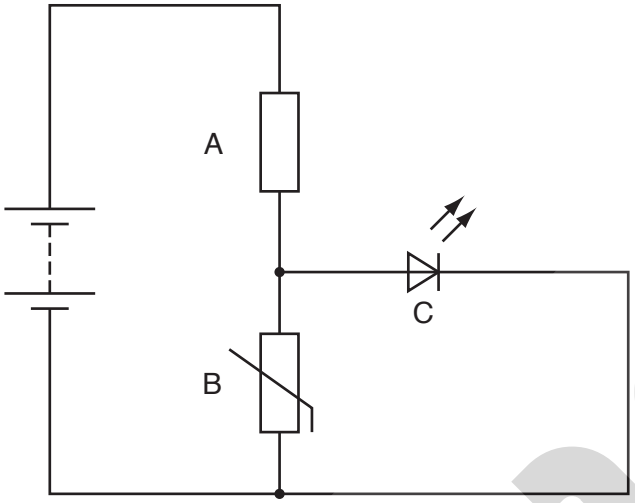

Fig. 9.1

(i) State the names of circuit components A, B and C.

component A .....

component B .....

component C .....
[2]

(ii) The circuit can be used to indicate a change in temperature.

State and explain what would be observed when the temperature changes from hot to cold.

.....

.....

.....

.....

.....

.....[4]

www.root19.com +91 - 9969 353 391

(b) Fig. 9.2 shows a digital circuit.

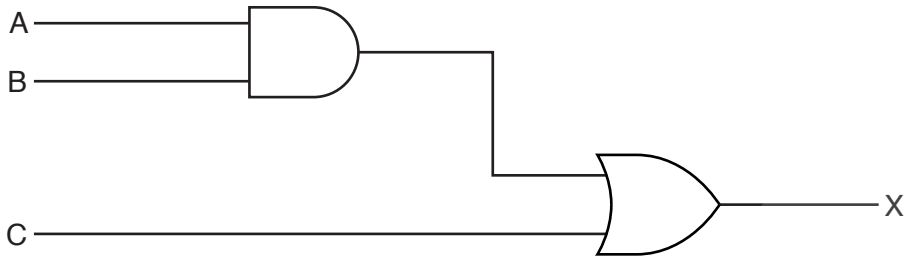

Fig. 9.2

Complete column X of the truth table for this circuit. Use the blank column for your working.

A	B	C		X
0	0	0		
0	1	0		
1	0	0		
1	1	0		
0	0	1		
0	1	1		
1	0	1		
1	1	1		

[3]

[Total: 9]

© UCLES 2017
www.root19.com

+91 - 9969 353 301

10 **(a)** Fig. 10.1 shows a wire that carries a current into the page.
The circles on Fig. 10.1 show the pattern of the magnetic field around the wire.

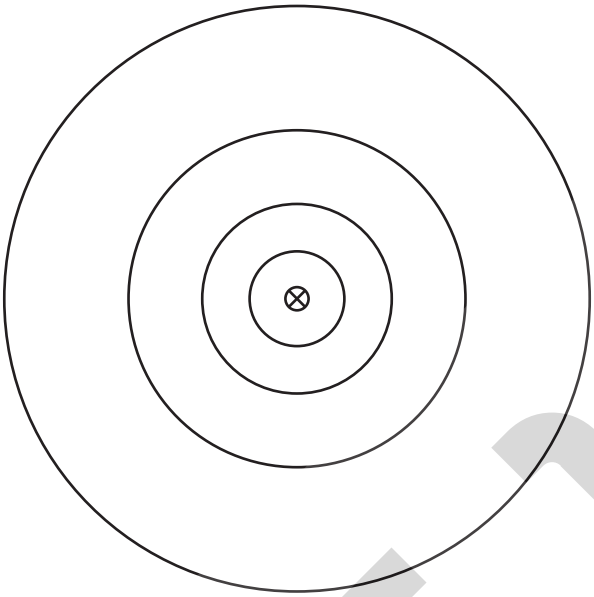

Fig. 10.1

(i) On Fig. 10.1, draw an arrow on each circle to show the direction of the magnetic field. [1]

(ii) State why the spacing of the circles increases as the distance from the wire increases.

.....

.....[1]

© UCLES 2017
www.root19.com

+91 - 9969 353 391

(b) Fig. 10.2 shows an electric door lock.

The slot in the door contains an unmagnetised iron bolt attached to a spring.
The slot in the door frame is empty. This slot is surrounded by the coils of a solenoid.

In Fig. 10.2 the door is unlocked. The spring is not stretched.

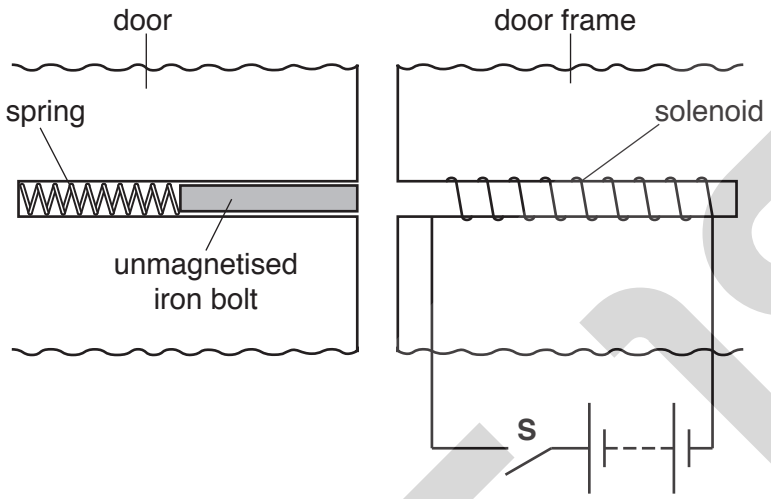

Fig. 10.2

In Fig. 10.3 the door is locked. The spring is now stretched.

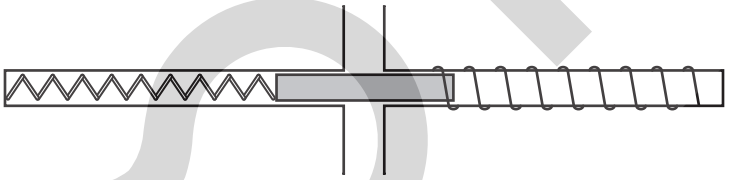

Fig. 10.3

The bolt is initially in the position shown in Fig. 10.2.

Describe and explain what happens when

(i) the switch **S** is closed,

.....

.....

.....

.....

.....[4]

(ii) the switch **S** is reopened.

.....

.....

.....[2]

[Total: 8]

www.root19.com +91 - 9969 353 301

11 The radioactive isotope bismuth-210 ($^{210}_{83}Bi$) decays by β-particle emission to an isotope of polonium (Po).

(a) Complete the nuclide equation that represents this decay.

$$^{210}_{83}Bi \rightarrow \,^{\cdots}_{\cdots}Po + \,^{\cdots}_{\cdots}\beta$$

[3]

(b) A radiation detector is placed on a bench in a laboratory where there are no artificial sources of radiation. The detector is switched on.

In seven one-minute periods, the detector displays these readings.

24 22 25 25 21 20 24

(i) Explain why, in the absence of any artificial source, there are readings on the detector. Suggest **one** origin of this effect.

.....

.....

.....[2]

(ii) Explain why the readings obtained are not all the same.

.....

.....[1]

(iii) The half-life of bismuth-210 is 5.0 days.
A sample of bismuth-210 is brought close to the detector and in one minute, the reading displayed is 487. The equipment is left in the same place for exactly 10 days.

Predict the reading in a one-minute period at the end of this time.

reading = ...[3]

[Total: 9]

Permission to reproduce items where third-party owned material protected by copyright is included has been sought and cleared where possible. Every reasonable effort has been made by the publisher (UCLES) to trace copyright holders, but if any items requiring clearance have unwittingly been included, the publisher will be pleased to make amends at the earliest possible opportunity.

To avoid the issue of disclosure of answer-related information to candidates, all copyright acknowledgements are reproduced online in the Cambridge International Examinations Copyright Acknowledgements Booklet. This is produced for each series of examinations and is freely available to download at www.cie.org.uk after the live examination series.

Cambridge International Examinations is part of the Cambridge Assessment Group. Cambridge Assessment is the brand name of University of Cambridge Local Examinations Syndicate (UCLES), which is itself a department of the University of Cambridge.

www.root19.com +91 - 9969 353 391